BKP1

如何订购/ HOW TO ORDER

BK	P	1	前盖 Front cover	旋向 Rotation	规格 Size	轴伸 Shaft	油口 Ports	油口位置 Ports position	油封 Seals	可选项 Options
系列号 Series	P- 齿轮泵 Pump	组别 Group	Q0	D 顺时针转 Clockwise	0.8					
			Q1	S 逆时针转 Counter clockwise	1.1					
			Q2	R 可正反转 Reversible	1.3					
			B0		1.6					
					1.8					
					2.1					
					2.7					
					3.2					
					3.7					
					4.2					
					4.8					
					5.8					
					7.0					
					8.0					

油口位置	Ports position
省略-侧进侧出	Omit-Side inlet and side outlet
A-前进前出	A-Front inlet and front outlet
B-后进前出	B-Back inlet and front outlet
C-后进侧出	C-Back inlet and side outlet
D-侧进前出	D-Side inlet and front outlet
R-后进后出	R-Back inlet and back outlet

油封	Seals
省略-温度范围在-10℃~+80℃,进油口最高绝对压力为3bar。	Omit-Range between -10℃ and +80℃,inlet pressure up to max. 3 bar absolute.
V-适用于高温介质，温度范围在-10℃~+120℃。	V-Version suitable for fluid at hi-temperatures, range between -10℃ and +120℃.
H-适用于低温介质，温度范围在-40℃~+80℃。	H-Version suitable for fluid at low-temperatures, range between -40℃ and +80℃.
T-适用于进油口最大绝对压力3~6bar。	T-Version suitable for inlet pressure up to max. 3 and 6 bar absolute.
N-适用于进油口最大绝对压力3~10bar。	N-Version suitable for inlet pressure up to max. 3 and 10 bar absolute.

范例/ Examples:

BKP1-Q0-D-0.8-G0-L1-B= 顺时针转，排量 0.8 cc/rev, Q0 前盖， G0 扁键轴伸，L1 安装油口，后进前出，标准油封
clockwise rotation, 0.8 cc/rev, Q0 front cover, G0 tang shaft, setting ports L1 type, back inlet and front outlet (B), standard seals

BKP1-Q1-D-0.8-G0-L3= 顺时针转，排量 0.8 cc/rev, Q1 前盖， G0 扁键轴伸，L3 安装油口，标准油封
clockwise rotation, 0.8 cc/rev, Q1 front cover, G0 tang shaft, setting ports L3 type, standard seals

BKP1-B0-D-0.8-T0-F0-N= 顺时针转，排量 0.8 cc/rev, B0 前盖， T0 1:8锥形轴伸，F0 安装油口,高压油封(N)
clockwise rotation, 0.8 cc/rev, B0 front cover, 1:8 tapered shaft(T0), setting ports F0 type, high pressure seals(N)

BKP1Q0

后盖：G3/8 螺纹深 12.
安装泵时，n.2 M8 螺钉扭矩设定为
27 ± 3 Nm.

End cover: G3/8 thread depth 12.
To mount the pump, n.2 M8 screws,
with a torque wrench setting fixed
at 27 ± 3 Nm.

进油口
INLET

出油口
OUTLET

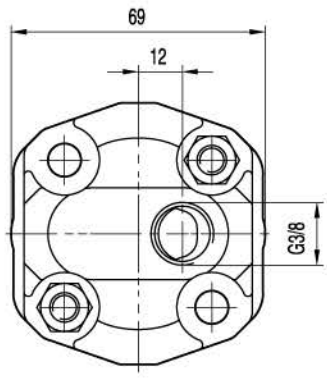

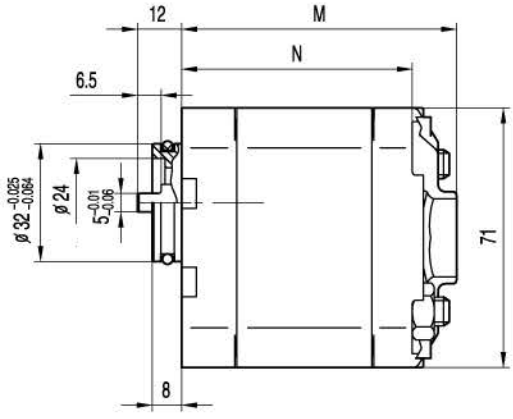

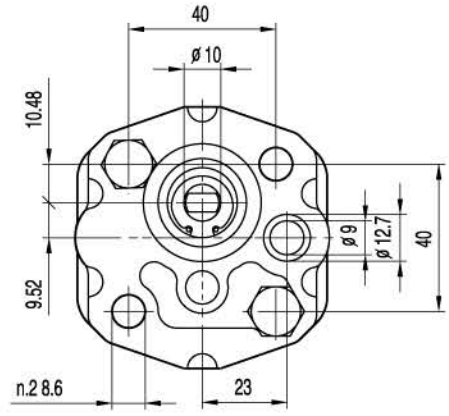

规格 Type	排量 Displacement	最大压力 Max pressure			最高转速 Max. speed	最低转速 Min. speed	尺寸 Dimensions	
		P1	P2	P3			M	N
	(cm^3/rev)	bar	bar	bar	(r/min)	(r/min)	mm	mm
BKP1Q0-D-0.8	0.8	230	250	270	6000	1000	73.5	61.5
BKP1Q0-D-1.1	1.1	230	250	270	6000	1000	74	62
BKP1Q0-D-1.3	1.3	230	250	270	6000	1000	75	63
BKP1Q0-D-1.6	1.6	230	250	270	6000	1000	76	64
BKP1Q0-D-1.8	1.8	230	250	270	6000	1000	77	65
BKP1Q0-D-2.1	2.1	230	250	270	6000	1000	78	66
BKP1Q0-D-2.7	2.7	230	250	270	6000	800	80	68
BKP1Q0-D-3.2	3.2	210	230	250	5000	800	82	70
BKP1Q0-D-3.7	3.7	210	230	250	4500	800	84	72
BKP1Q0-D-4.2	4.2	210	230	250	4000	800	86	74
BKP1Q0-D-4.8	4.8	190	210	230	3500	600	88	76
BKP1Q0-D-5.8	5.8	190	210	230	3000	600	92	80
BKP1Q0-D-7.0	7.0	160	180	200	2500	600	96	84
BKP1Q0-D-8.0	8.0	160	180	200	2100	600	100	88

BKP1Q1

M6 螺纹深 12.
安装泵时，n.2 M8 螺钉扭矩设定为 27 ± 3 Nm.

M6 threads depth 12.
To mount the pump, n.2 M8 screws, with a torque wrench setting fixed at 27 ± 3 Nm.

出油口
OUTLET

进油口
INLET

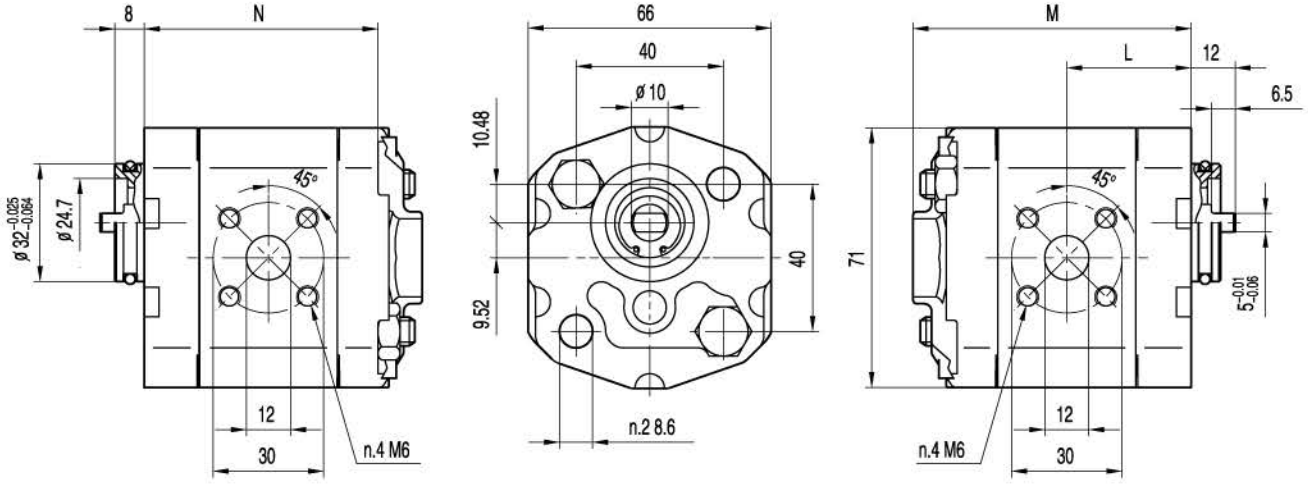

规格 Type	排量 Displacement	最大压力 Max pressure			最高转速 Max. speed	最低转速 Min. speed	尺寸 Dimensions		
		P1	P2	P3			M	N	L
	(cm^3/rev)	bar	bar	bar	(r/min)	(r/min)	mm	mm	mm
BKP1Q1-D-0.8	0.8	230	250	270	6000	1000	73.5	61.5	32.8
BKP1Q1-D-1.1	1.1	230	250	270	6000	1000	74	62	33
BKP1Q1-D-1.3	1.3	230	250	270	6000	1000	75	63	33.5
BKP1Q1-D-1.6	1.6	230	250	270	6000	1000	76	64	34
BKP1Q1-D-1.8	1.8	230	250	270	6000	1000	77	65	34.5
BKP1Q1-D-2.1	2.1	230	250	270	6000	1000	78	66	35
BKP1Q1-D-2.7	2.7	230	250	270	6000	800	80	68	36
BKP1Q1-D-3.2	3.2	210	230	250	5000	800	82	70	37
BKP1Q1-D-3.7	3.7	210	230	250	4500	800	84	72	38
BKP1Q1-D-4.2	4.2	210	230	250	4000	800	86	74	39
BKP1Q1-D-4.8	4.8	190	210	230	3500	600	88	76	40
BKP1Q1-D-5.8	5.8	190	210	230	3000	600	92	80	42
BKP1Q1-D-7.0	7.0	160	180	200	2500	600	96	84	44
BKP1Q1-D-8.0	8.0	160	180	200	2100	600	100	88	46

BKP1Q2

G3/8 螺纹深 12.
安装泵时，n.2 M8 螺钉扭矩设定为
27 ± 3 Nm.

G3/8 threads depth 12.
To mount the pump, n.2 M8 screws,
with a torque wrench setting fixed
at 27 ± 3 Nm.

出油口
OUTLET

进油口
INLET

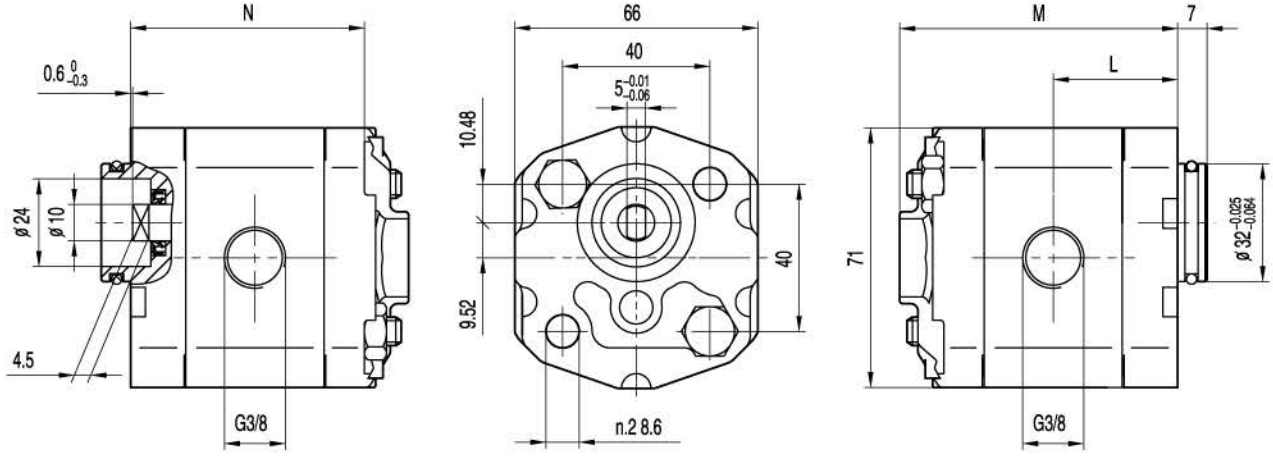

规格 Type	排量 Displacement	最大压力 Max pressure			最高转速 Max. speed	最低转速 Min. speed	尺寸 Dimensions		
		P1	P2	P3			M	N	L
	(cm^3/rev)	bar	bar	bar	(r/min)	(r/min)	mm	mm	mm
BKP1Q2-D-0.8	0.8	230	250	270	6000	1000	73.5	61.5	32.8
BKP1Q2-D-1.1	1.1	230	250	270	6000	1000	74	62	33
BKP1Q2-D-1.3	1.3	230	250	270	6000	1000	75	63	33.5
BKP1Q2-D-1.6	1.6	230	250	270	6000	1000	76	64	34
BKP1Q2-D-1.8	1.8	230	250	270	6000	1000	77	65	34.5
BKP1Q2-D-2.1	2.1	230	250	270	6000	1000	78	66	35
BKP1Q2-D-2.7	2.7	230	250	270	6000	800	80	68	36
BKP1Q2-D-3.2	3.2	210	230	250	5000	800	82	70	37
BKP1Q2-D-3.7	3.7	210	230	250	4500	800	84	72	38
BKP1Q2-D-4.2	4.2	210	230	250	4000	800	86	74	39
BKP1Q2-D-4.8	4.8	190	210	230	3500	600	88	76	40
BKP1Q2-D-5.8	5.8	190	210	230	3000	600	92	80	42
BKP1Q2-D-7.0	7.0	160	180	200	2500	600	96	84	44
BKP1Q2-D-8.0	8.0	160	180	200	2100	600	100	88	46

BKP1B0

M6 螺纹深 12.
安装泵时，n.4 M8 螺钉扭矩设定为 27 ± 3 Nm.
轴伸 M7 螺母扭矩设定为 8 Nm.

M6 thread depth 12.
To mount the pump, n.4 M8 screws, with a torque wrench setting fixed at 27 ± 3 Nm.
Shaft M7 nut, with a torque wrench setting fixed at 8 Nm.

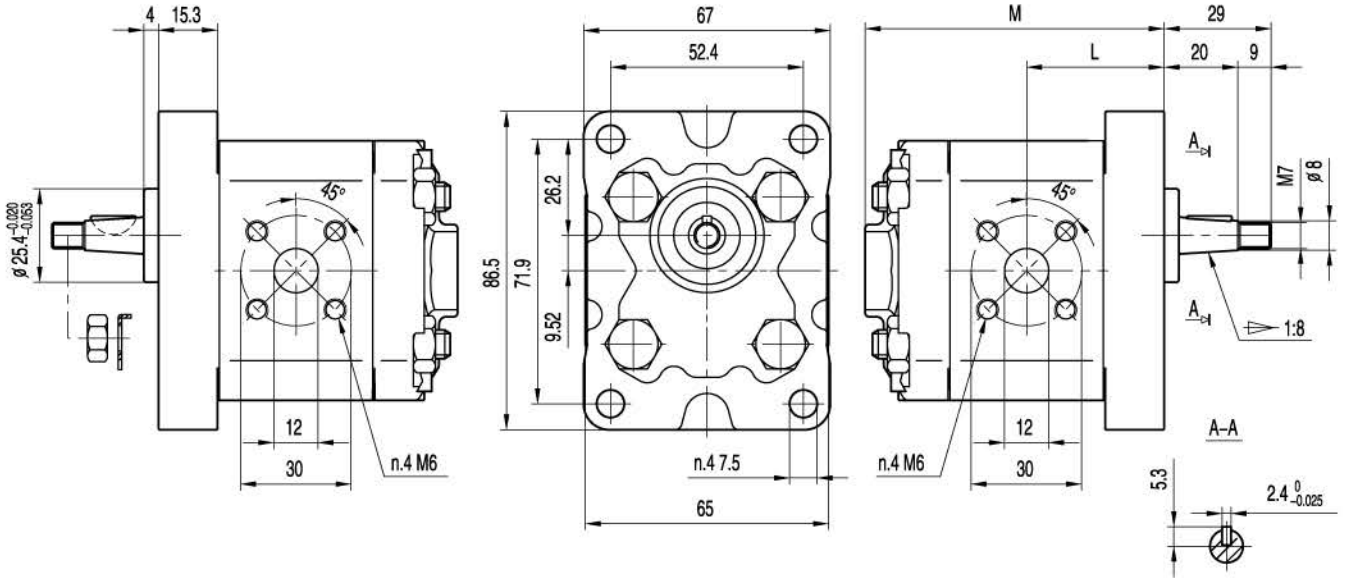

规格 Type	排量 Displacement	最大压力 Max pressure			最高转速 Max. speed	最低转速 Min. speed	尺寸 Dimensions	
		P1	P2	P3			M	L
	(cm³/rev)	bar	bar	bar	(r/min)	(r/min)	mm	mm
BKP1B0-D-0.8	0.8	230	250	270	6000	1000	73.5	32.8
BKP1B0-D-1.1	1.1	230	250	270	6000	1000	74	33
BKP1B0-D-1.3	1.3	230	250	270	6000	1000	75	33.5
BKP1B0-D-1.6	1.6	230	250	270	6000	1000	76	34
BKP1B0-D-1.8	1.8	230	250	270	6000	1000	77	34.5
BKP1B0-D-2.1	2.1	230	250	270	6000	1000	78	35
BKP1B0-D-2.7	2.7	230	250	270	6000	800	80	36
BKP1B0-D-3.2	3.2	210	230	250	5000	800	82	37
BKP1B0-D-3.7	3.7	210	230	250	4500	800	84	38
BKP1B0-D-4.2	4.2	210	230	250	4000	800	86	39
BKP1B0-D-4.8	4.8	190	210	230	3500	600	88	40
BKP1B0-D-5.8	5.8	190	210	230	3000	600	92	42
BKP1B0-D-7.0	7.0	160	180	200	2500	600	96	44
BKP1B0-D-8.0	8.0	160	180	200	2100	600	100	46

BKP1B0-Y

M6 螺纹深 12.
安装泵时，n.4 M8 螺钉扭矩设定为 27 ±3 Nm.
轴伸 M7 螺母扭矩设定为8 Nm.

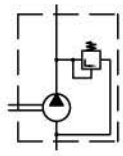

M6 thread depth 12.
To mount the pump, n.4 M8 screws, with a torque wrench setting fixed at 27 ±3 Nm.
Shaft M7 nut, with a torque wrench setting fixed at 8 Nm.

出油口
OUTLET

进油口
INLET

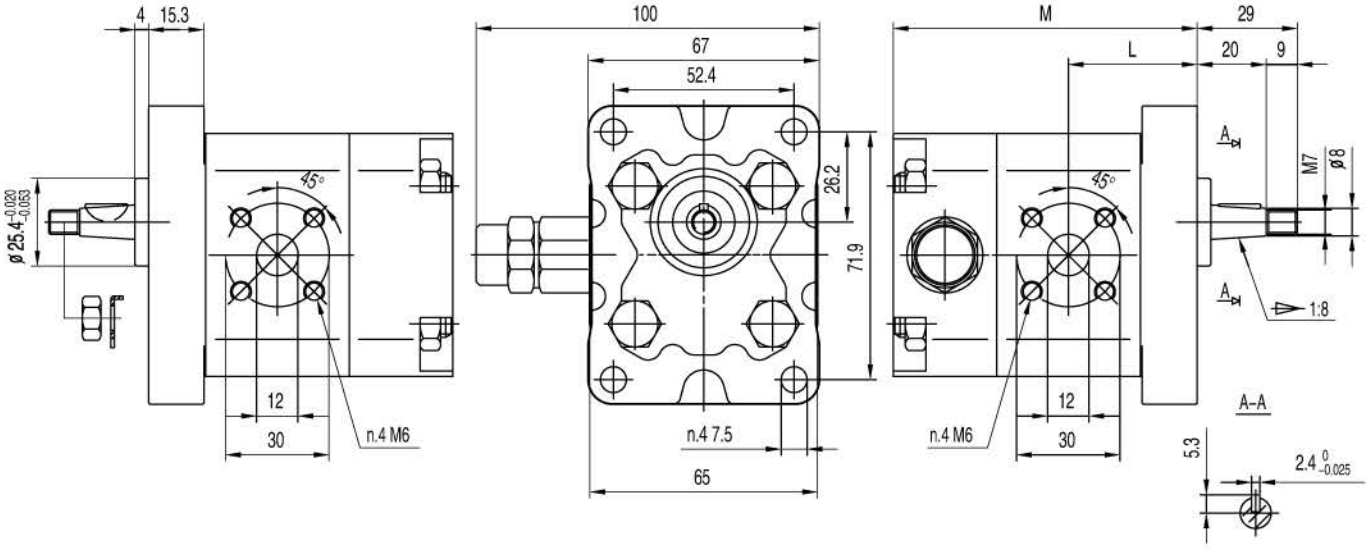

规格 Type	排量 Displacement	最大压力 Max pressure			最高转速 Max. speed	最低转速 Min. speed	尺寸 Dimensions	
		P1	P2	P3			M	L
	(cm³/rev)	bar	bar	bar	(r/min)	(r/min)	mm	mm
BKP1B0-D-0.8-Y	0.8	230	250	270	6000	1000	82.5	32.8
BKP1B0-D-1.1-Y	1.1	230	250	270	6000	1000	83	33
BKP1B0-D-1.3-Y	1.3	230	250	270	6000	1000	84	33.5
BKP1B0-D-1.6-Y	1.6	230	250	270	6000	1000	85	34
BKP1B0-D-1.8-Y	1.8	230	250	270	6000	1000	86	34.5
BKP1B0-D-2.1-Y	2.1	230	250	270	6000	1000	87	35
BKP1B0-D-2.7-Y	2.7	230	250	270	6000	800	89	36
BKP1B0-D-3.2-Y	3.2	210	230	250	5000	800	91	37
BKP1B0-D-3.7-Y	3.7	210	230	250	4500	800	93	38
BKP1B0-D-4.2-Y	4.2	210	230	250	4000	800	95	39
BKP1B0-D-4.8-Y	4.8	190	210	230	3500	600	97	40
BKP1B0-D-5.8-Y	5.8	190	210	230	3000	600	101	42
BKP1B0-D-7.0-Y	7.0	160	180	200	2500	600	105	44
BKP1B0-D-8.0-Y	8.0	160	180	200	2100	600	109	46

BHLP1

高低压多联泵

BHLP1高低压液压齿轮泵适合应用于系统液压驱动器在低负载时能快速前进或返回，而当液压驱动器在高负载时能低速运动的液压系统，特别是该结构具有对电机功率要求低的优势。

BHLP1高低压齿轮泵是一款带特殊集成阀的双联齿轮泵（见如下图表），它广泛适用于垃圾压缩机、劈木机、卡紧机械、折边机和金属成形机等。

HIGH–LOW MUULTIPLE PUMPS

BHLP1 High–Low hydraulic gear pumps is the very ideal pump for applications which require a quick approach and/or return of the actuator at low loads and slow motion of the actuator at high loads. In particular this model offers the advantage of requiring lower power of the motor.

BHLP1 High–Low hydraulic gear pumps is a special double stage pump with special integrated valves (as shown in the hydraulic diagram) has been specially designed for applications such as trash compactors, log splitters, clamping mechanisms, crimping machines, metal forming machines etc.

技术特征

Technical features

前泵小排量高压力 First stage Low displacement high pressure	排量从1.1cm³/rev 到3.2cm³/rev–P1=230 bar From 1. 1cm ³/r ev to 3.2cm ³/r ev– P1= 230 bar
后泵大排量低压力 Second stage High displacement low pressure	排量从3.7cm³/rev 到9.8cm³/rev– （压力由卸荷阀设定） From 3.7cm ³/r ev to 9.8cm ³/r ev– (Pressure set by unloading val ve)
卸荷阀 Unloading valve	标准设定压力 35 bar Standard setting 3 5 bar
转速范围 RPM pump range	从1000转到3500转 From 1000 rpm to 3500 rpm
前盖和轴伸 Flanges and shafts	见BKP1目录 Ref. BKP1 catalogue
油口 Ports	侧进侧出，油口代号为L5 Common inlet. Common outlet. Side ports code L5

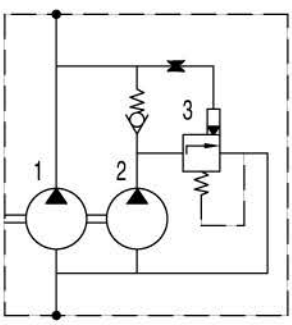

1. First stage high pressure
2. Second stage low pressure
3. Unloading valve

BKP1

前盖/FRONT COVER　　轴伸/SHAFTS

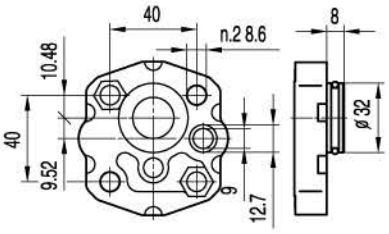

Q0

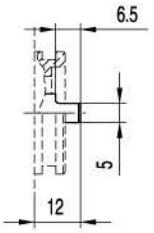

G0

最大扭矩 Max.Torque　20 Nm

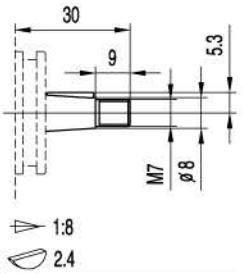

T0

最大扭矩 Max.Torque　25 Nm

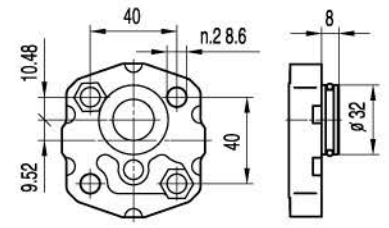

Q1

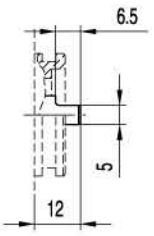

G0

最大扭矩 Max.Torque　20 Nm

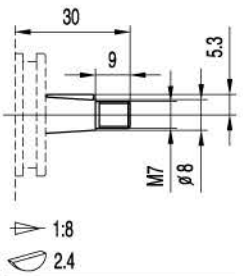

T0

最大扭矩 Max.Torque　25 Nm

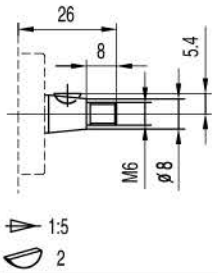

T1

最大扭矩 Max.Torque　23 Nm

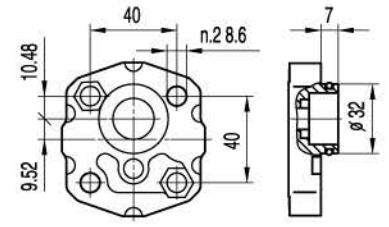

Q2

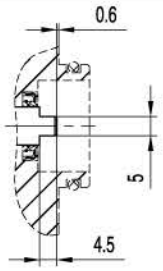

G1

最大扭矩 Max.Torque　20 Nm

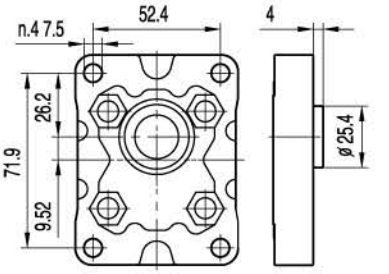

B0

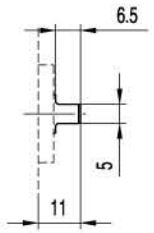

G0

最大扭矩 Max.Torque　20 Nm

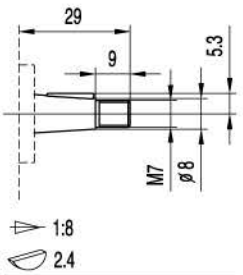

T0

最大扭矩 Max.Torque　25 Nm

BKP1

油口/PORTS

L0

规格 TYPE	进油口 INLET	出油口 OUTLET
	A	a
BKP1...0.8 ÷ BKP1...8.0	G1/4	ø 9

L1

规格 TYPE	进油口 INLET	出油口 OUTLET
	A	a
BKP1...0.8 ÷ BKP1...8.0	G3/8	ø 9

N0

规格 TYPE	进油口 INLET	出油口 OUTLET
	A	a
BKP1...0.8 ÷ BKP1...8.0	3/8 NPT	ø 9

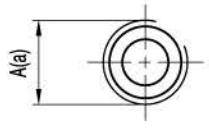

L2

规格 TYPE	进油口 INLET	出油口 OUTLET
	A	a
BKP1...0.8 ÷ BKP1...8.0	G3/8	G1/4

BKP1

油口/PORTS

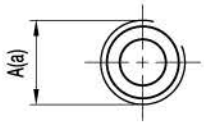

L3

规格 TYPE	进油口 INLET	出油口 OUTLET
	A	a
BKP1...0.8 ÷ BKP1...8.0	G3/8	G3/8

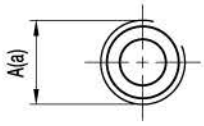

Z0

规格 TYPE	进油口 INLET	出油口 OUTLET
	A	a
BKP1...0.8 ÷ BKP1...8.0	M18x1.5	M14x1.5

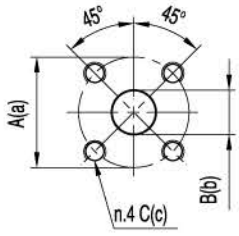

F0

规格 TYPE	进油口 INLET			出油口 OUTLET		
	A	B	C	a	b	c
BKP1...0.8 ÷ BKP1...8.0	30	12	M6	30	12	M6

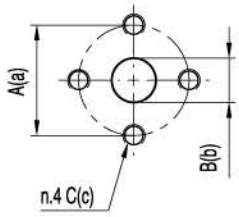

E0

规格 TYPE	进油口 INLET			出油口 OUTLET		
	A	B	C	a	b	c
BKP1...0.8 ÷ BKP1...8.0	30	12	M6	30	12	M6